AC/DC INDUCTIVE PLASTIC HOUSING PROXIMITY SWITCH CONNECTOR TYPE

M 12		M 18		M 18	
●	○	●	○	●	○
2 mm	4 mm	5 mm	8 mm	5 mm	8 mm
PBT RESIN		PBT RESIN		PBT RESIN	
●		●		●	

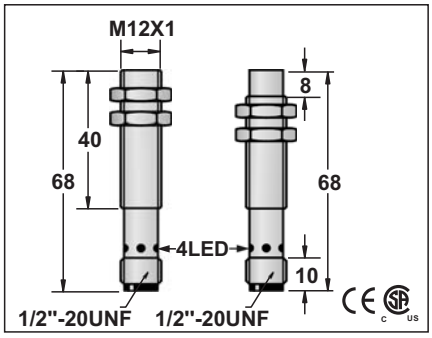

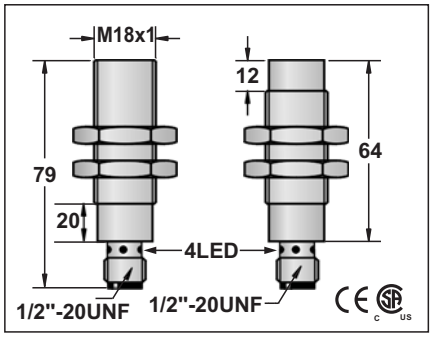

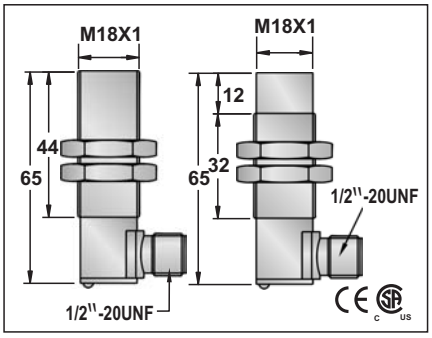

20-250 VAC, 50-60 Hz; 20-250 VDC			20-250 VAC, 50-60 Hz; 20-250 VDC			20-250 VAC, 50-60 Hz; 20-250 VDC		
DC RIPPLE <10%			DC RIPPLE <10%			DC RIPPLE <10%		
<2.5mA			<2.5mA			<2.5mA		
100mA			200mA			200mA		
<2.5mA			<2.5mA			<2.5mA		
2.2A for 20ms			2.2A for 20ms			2.2A for 20ms		
5mA			5mA			5mA		
<=10 VAC :<=8 VDC			<=10 VAC :<=8 VDC			<=10 VAC :<=8 VDC		
25HZ AC; 40 Hz DC			25HZ AC; 40 Hz DC			25HZ AC; 40 Hz DC		
10ms/10ms			10ms/10ms			10ms/10ms		
<15%(Sr)			<15% (Sr)			<15% (Sr)		
<1.0% (Sr)			<1.0% (Sr)			<1.0% (Sr)		
IP67			IP67			IP67		
-25°C - +70°C			-25°C - +70°C			-25°C - +70°C		
<10% (Sr)			<10% (Sr)			<10% (Sr)		
YES (DC 20~30V only)			YES			YES		
-			-			-		
-			-			-		
RFI>3V/m / EFT>1KV / ESD>4KV (contact)			RFI>3V/m / EFT>1KV / ESD>4KV (contact)			RFI>3V/m / EFT>1KV / ESD>4KV (contact)		
IEC 60947-5-2,Part 7.4.1 / IEC 60947-5-2,Part 7.4.2			IEC 60947-5-2,Part 7.4.1 / IEC 60947-5-2,Part 7.4.2			IEC 60947-5-2,Part 7.4.1 / IEC 60947-5-2,Part 7.4.2		
PBT			PBT			PBT		
FCP1-1202U-AUL3	58	FCP2-1204U-AUL3	FCP1-1805U-AUL3	58	FCP2-1808U-AUL3	FCP1-1805U-AUL3Y	58	FCP2-1808U-AUL3Y
FCP1-1202U-BUL3	58	FCP2-1204U-BUL3	FCP1-1805U-BUL3	58	FCP2-1808U-BUL3	FCP1-1805U-BUL3Y	58	FCP2-1808U-BUL3Y
Approx.14 g			Approx.80 g			Approx.80 g		

Note:
Coming Soon : Part numbers with underline

AC/DC INDUCTIVE PLASTIC HOUSING PROXIMITY SWITCH CONNECTOR TYPE

M 18		ϕ20		M 30	
●	○	●	○	●	○
5 mm	8 mm	8 mm	12 mm	10 mm	15 mm
PBT RESIN		PBT RESIN		PBT RESIN	
●		●		●	

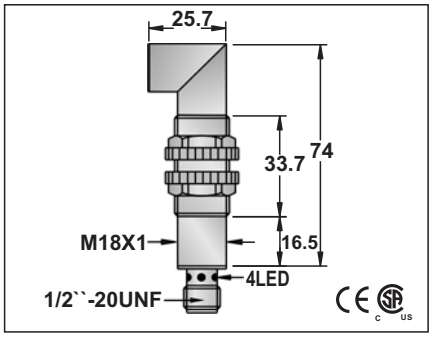

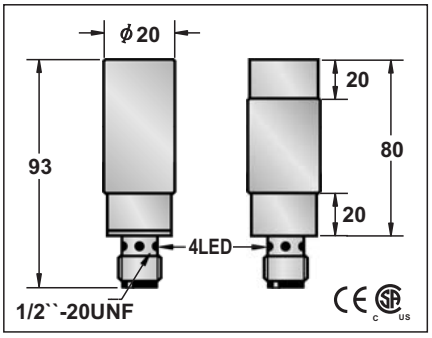

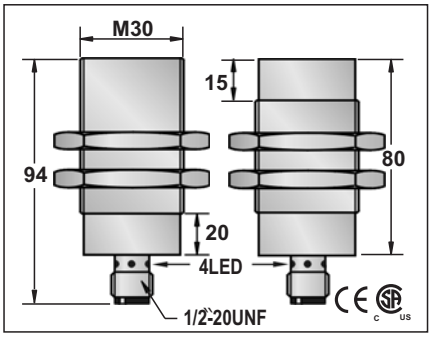

20-250 VAC, 50-60 Hz; 20-250 VDC		
DC RIPPLE <10%		
<2.5mA		
200mA		
<2.5mA		
2.2A for 20ms		
5mA		
<=10 VAC :<=8 VDC		
25HZ AC; 40 Hz DC		
10ms/10ms		
<15% (Sr)		
<1.0% (Sr)		
IP67		
-25°C - +70°C		
<10% (Sr)		
YES		
-		
-		
RFI>3V/m / EFT>1KV / ESD>4KV (contact)		
IEC 60947-5-2,Part 7.4.1 / IEC 60947-5-2,Part 7.4.2		
PBT		
FCP1-1805U-AUL3Z	58	FCP2-1808U-AUL3Z
FCP1-1805U-BUL3Z	58	FCP2-1808U-BUL3Z
Approx.14 g		

20-250 VAC, 50-60 Hz; 20-250 VDC		
DC RIPPLE <10%		
<2.5mA		
200mA		
<2.5mA		
2.2A for 20ms		
5mA		
<=10 VAC :<=8 VDC		
25HZ AC; 40 Hz DC		
10ms/10ms		
<15% (Sr)		
<1.0% (Sr)		
IP67		
-25°C - +70°C		
<10% (Sr)		
YES		
-		
-		
RFI>3V/m / EFT>1KV / ESD>4KV (contact)		
IEC 60947-5-2,Part 7.4.1 / IEC 60947-5-2,Part 7.4.2		
PBT		
FCP1-D2008U-AUL3	58	FCP2-D2012U-AUL3
FCP1-D2008U-BUL3	58	FCP2-D2012U-BUL3
Approx.90 g		

20-250 VAC, 50-60 Hz; 20-250 VDC		
DC RIPPLE <10%		
<2.5mA		
200mA		
<2.5mA		
2.2A for 20ms		
5mA		
<=10 VAC :<=8 VDC		
25HZ AC; 40 Hz DC		
10ms/10ms		
<15% (Sr)		
<1.0% (Sr)		
IP67		
-25°C - +70°C		
<10% (Sr)		
YES		
-		
-		
RFI>3V/m / EFT>1KV / ESD>4KV (contact)		
IEC 60947-5-2,Part 7.4.1 / IEC 60947-5-2,Part 7.4.2		
PBT		
FCP1-3010U-AUL3	58	FCP2-3015U-AUL3
FCP1-3010U-BUL3	58	FCP2-3015U-BUL3
Approx.120 g		

Note:
Coming Soon : Part numbers with underline

AC/DC INDUCTIVE PLASTIC HOUSING PROXIMITY SWITCH CONNECTOR TYPE

M 30		ϕ34		ϕ34	
●	○	●	○	●	○
10 mm	15 mm	15 mm	20 mm	15 mm	20 mm
PBT RESIN		PBT RESIN		PBT RESIN	
●		●		●	

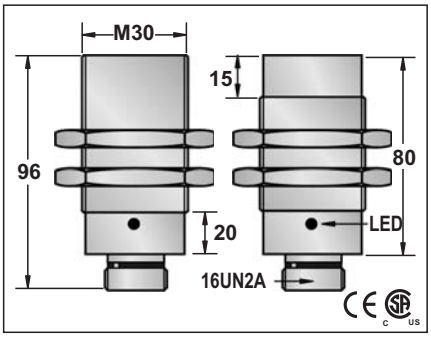

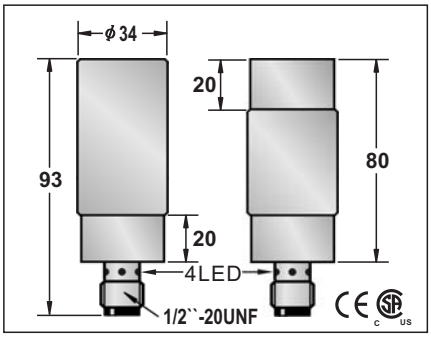

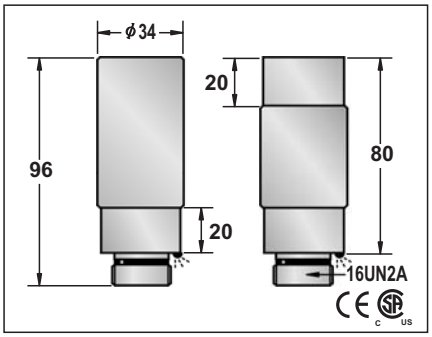

M 30	ϕ34	ϕ34
20-250 VAC, 50-60 Hz; 20-250 VDC	20-250 VAC, 50-60 Hz; 20-250 VDC	20-250 VAC, 50-60 Hz; 20-250 VDC
DC RIPPLE <10%	DC RIPPLE <10%	DC RIPPLE <10%
<2.5mA	<2.5mA	<2.5mA
200mA	200mA	200mA
<2.5mA	<2.5mA	<2.5mA
2.2A for 20ms	2.2A for 20ms	2.2A for 20ms
5mA	5mA	5mA
<=10 VAC :<=8 VDC	<=10 VAC :<=8 VDC	<=10 VAC :<=8 VDC
25HZ AC; 40 Hz DC	25HZ AC; 40 Hz DC	25HZ AC; 40 Hz DC
10ms/10ms	10ms/10ms	10ms/10ms
<15% (Sr)	<15% (Sr)	<15% (Sr)
<1.0% (Sr)	<1.0% (Sr)	<1.0% (Sr)
IP67	IP67	IP67
-25°C - +70°C	-25°C - +70°C	-25°C - +70°C
<10% (Sr)	<10% (Sr)	<10% (Sr)
YES	YES	YES
-	-	-
-	-	-
RFI>3V/m / EFT>1KV / ESD>4KV (contact)	RFI>3V/m / EFT>1KV / ESD>4KV (contact)	RFI>3V/m / EFT>1KV / ESD>4KV (contact)
IEC 60947-5-2,Part 7.4.1 / IEC 60947-5-2,Part 7.4.2	IEC 60947-5-2,Part 7.4.1 / IEC 60947-5-2,Part 7.4.2	IEC 60947-5-2,Part 7.4.1 / IEC 60947-5-2,Part 7.4.2
PBT	PBT	PBT

FCP1-3010U-AZL2	66	FCP2-3015U-AZL2	FCP1-D3415U-AUL3	58	FCP2-D3420U-AUL3	FCP1-D3415U-AZL2	66	FCP2-D3420U-AZL2
FCP1-3010U-BZL2	66	FCP2-3015U-BZL2	FCP1-D3415U-BUL3	58	FCP2-D3420U-BUL3	FCP1-D3415U-BZL2	66	FCP2-D3420U-BZL2

M 30	ϕ34	ϕ34
Approx.120 g	Approx.162 g	Approx.162 g

Note:
Coming Soon : Part numbers with underline